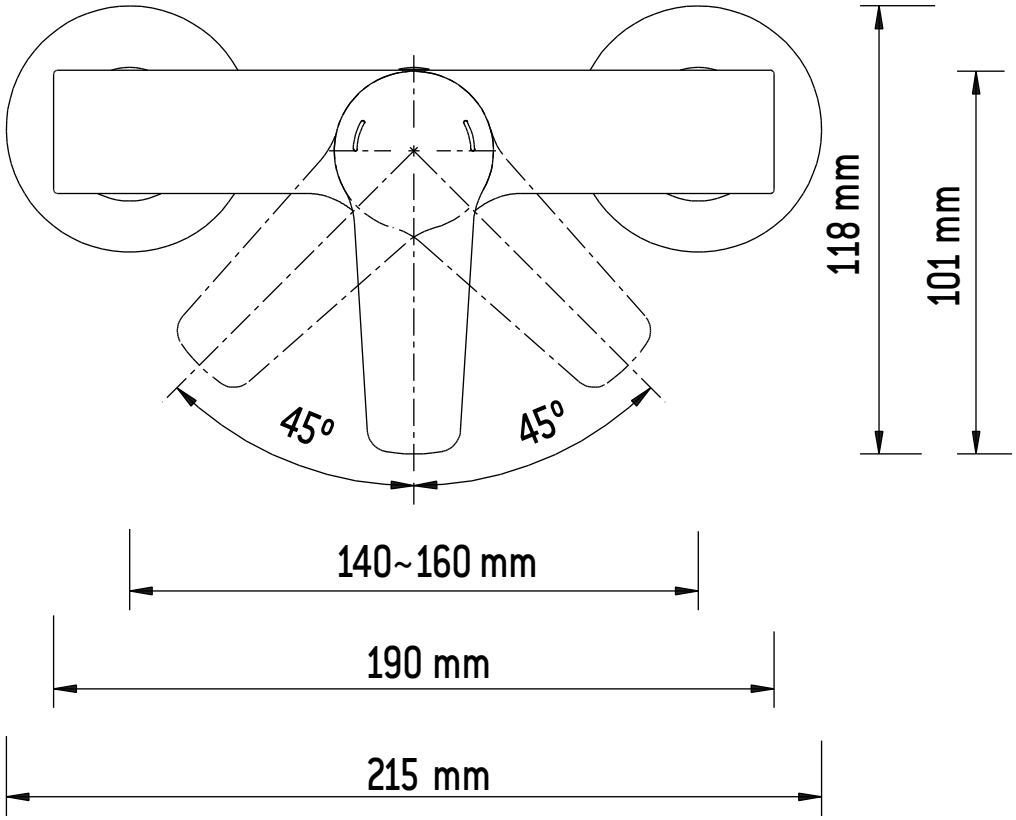
118 mm
101 mm
45°
45°
140~160 mm
190 mm
215 mm

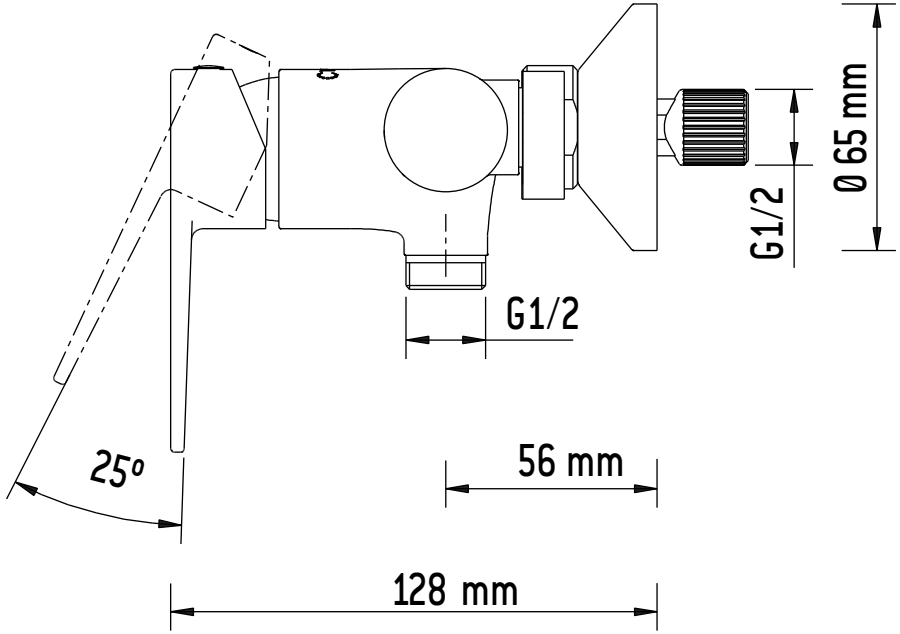
Ø 65 mm
G1/2
G1/2
25°
56 mm
128 mm